Traffa

Bedienhandbuch
JXC x1x Schrittmotor-Controller

Technisches Büro Traffa

Innovative Antriebslösungen

Der optimale Antrieb individuell für Ihre Anforderung

Doc. No.JXC※-OMX0018

Supplementary Operation Manual

PRODUCT NAME

Compatible with Battery-Less Absolute Encoder

MODEL / Series / Product Number

JXC□1□ Series

This Operation Manual explains the functions that can be achieved when the LE□E□ series electric actuator with battery-less absolute encoder and JXC series are combined. Refer to the Operation Manual of the JXC□1□ series.

SMC Corporation

Contents

1. Safety Instructions 3
2. Product Outline 5
2.1 Outline of battery-less absolute encoder 5
2.2 How to order 7
2.3 Product configuration 8
2.4 Procedure (for operating the actuator) 8
3. Specifications 9
3.1 Basic specifications 9
3.2 Parts description 10
3.3 Mounting 10
(1) Mounting 10
(2) Grounding 10
(3) Mounting location 10
(4) Precautions for electric actuator installation 11
4. Initial Setting Method 11
5. External Connection 11
6. Power Supply Plug 11
7. LED Display 11
8. Operation Methods 11
9. Memory Map 11
10. Setting Data Entry 12
10.1 Step data 12
10.2 Basic parameters 12
10.3 Return to origin parameter 14
11. Operations 15
11.1 Return to origin position 15
11.2 Positioning operation 15
11.3 Pushing operation 15
11.4 Controller input signal response time 15
11.5 Methods of interrupting operation 15
12. Start up procedure for battery-less absolute encoder 16
12.1 Procedure for start up 16
12.2 When supplying power for the first time 17
12.3 Supply of powe 18
12.4 Alarm (group E) is cleared by a cut to the power supply 19
13. Operation Instructions 20

14. Option 20
14.1 Actuator cable 20
14.2 Actuator cable for actuator with lock (for sensor and lock) 21
14.3 Communication cable for controller setting 22
14.4 Power supply plug 22
14.5 Teaching box 23
15. Alarm Detection for Motor Control 24
15.1 Alarm group output 24
15.2 Alarms and countermeasures 25
16. Specific Precautions for Battery-Less Absolute Encoder 31
17. Troubleshooting 33
17.1 Operation errors 33
17.2 Position / Speed problems 35

JXC□1 Series/ Controller
1. Safety Instructions

These safety instructions are intended to prevent hazardous situations and/or equipment damage. These instructions indicate the level of potential hazard with the labels of “Caution,” “Warning” or “Danger.”
They are all important notes for safety and must be followed in addition to International Standards (ISO/IEC)*1) , and other safety regulations.

*1) ISO 4414: Pneumatic fluid power -- General rules relating to systems.
ISO 4413: Hydraulic fluid power -- General rules relating to systems.
IEC 60204-1: Safety of machinery -- Electrical equipment of machines .(Part 1: General requirements)
ISO 10218: Manipulating industrial robots -Safety.
etc.

Caution	**Caution** indicates a hazard with a low level of risk which, if not avoided, could result in minor or moderate injury.
Warning	**Warning** indicates a hazard with a medium level of risk which, if not avoided, could result in death or serious injury.
Danger	**Danger** indicates a hazard with a high level of risk which, if not avoided, will result in death or serious injury.

⚠Warning

1. The compatibility of the product is the responsibility of the person who designs the equipment or decides its specifications.
Since the product specified here is used under various operating conditions, its compatibility with specific equipment must be decided by the person who designs the equipment or decides its specifications based on necessary analysis and test results.
The expected performance and safety assurance of the equipment will be the responsibility of the person who has determined its compatibility with the product.
This person should also continuously review all specifications of the product referring to its latest catalog information, with a view to giving due consideration to any possibility of equipment failure when configuring the equipment.

2. Only personnel with appropriate training should operate machinery and equipment.
The product specified here may become unsafe if handled incorrectly.
The assembly, operation and maintenance of machines or equipment including our products must be performed by an operator who is appropriately trained and experienced.

3. Do not service or attempt to remove product and machinery/equipment until safety is confirmed.
1.The inspection and maintenance of machinery/equipment should only be performed after measures to prevent falling or runaway of the driven objects have been confirmed.
2.When the product is to be removed, confirm that the safety measures as mentioned above are implemented and the power from any appropriate source is cut, and read and understand the specific product precautions of all relevant products carefully.
3. Before machinery/equipment is restarted, take measures to prevent unexpected operation and malfunction.

4. Contact SMC beforehand and take special consideration of safety measures if the product is to be used in any of the following conditions.
1. Conditions and environments outside of the given specifications, or use outdoors or in a place exposed to direct sunlight.
2. Installation on equipment in conjunction with atomic energy, railways, air navigation, space, shipping, vehicles, military, medical treatment, combustion and recreation, or equipment in contact with food and beverages, emergency stop circuits, clutch and brake circuits in press applications, safety equipment or other applications unsuitable for the standard specifications described in the product catalog.
3. An application which could have negative effects on people, property, or animals requiring special safety analysis.
4.Use in an interlock circuit, which requires the provision of double interlock for possible failure by using a mechanical protective function, and periodical checks to confirm proper operation.

Safety Instructions

⚠ Caution

1.The product is provided for use in manufacturing industries.
The product herein described is basically provided for peaceful use in manufacturing industries.
If considering using the product in other industries, consult SMC beforehand and exchange specifications or a contract if necessary.
If anything is unclear, contact your nearest sales branch.

Limited warranty and Disclaimer/Compliance Requirements

The product used is subject to the following "Limited warranty and Disclaimer" and "Compliance Requirements".
Read and accept them before using the product.

Limited warranty and Disclaimer

1. The warranty period of the product is 1 year in service or 1.5 years after the product is delivered, whichever is first.∗2)
Also, the product may have specified durability, running distance or replacement parts. Please consult your nearest sales branch.
2. For any failure or damage reported within the warranty period which is clearly our responsibility, a replacement product or necessary parts will be provided.
This limited warranty applies only to our product independently, and not to any other damage incurred due to the failure of the product.
3. Prior to using SMC products, please read and understand the warranty terms and disclaimers noted in the specified catalog for the particular products.
∗2) Vacuum pads are excluded from this 1 year warranty.
A vacuum pad is a consumable part, so it is warranted for a year after it is delivered. Also, even within the warranty period, the wear of a product due to the use of the vacuum pad or failure due to the deterioration of rubber material are not covered by the limited warranty.

Compliance Requirements

1. The use of SMC products with production equipment for the manufacture of weapons of mass destruction (WMD) or any other weapon is strictly prohibited.
2. The exports of SMC products or technology from one country to another are governed by the relevant security laws and regulation of the countries involved in the transaction. Prior to the shipment of a SMC product to another country, assure that all local rules governing that export are known and followed.

⚠ Caution

SMC products are not intended for use as instruments for legal metrology.
Products that SMC manufactures or sells are not measurement instruments that are qualified by pattern approval tests relating to the measurement laws of each country.
Therefore, SMC products cannot be used for business or certification ordained by the measurement laws of each country.

2. Product Outline

2.1 Outline of battery-less absolute encoder

(1) What is a Battery-Less Absolute Encoder?

The Battery-Less Absolute Encoder is an encoder which can detect the absolute position of multiple rotations. The battery of this encoder does not back up the information of the multiple rotation whilst the absolute encoder for single rotation does. Because of this, battery replacement is not required.

Detection of the absolute position enables the encoder to detect the actuator position when power is supplied, so operation is available with no return to origin operation.

(2) When is the return to origin operation required?

1) When the power is applied for the first time.
2) When the actuator or motor is replaced.
3) When alarm "Group E" is cleared by re-applying the power.
   (E.g.) When the encoder wiring is disconnected when the power is supplied.
   - Encoder error (code: 01-192)

⚠ Warning

Do not use in an environment where a strong magnetic field is present.

A magnetic sensor is used in the encoder. Therefore, if the actuator motor is used in a strong magnetic field environment, malfunction of failure may occur.

Do not expose the actuator motor to a magnetic field with a magnetic flux density of 1 mT or more.

Please read 16. Individual Precautions for Battery-Less Absolute Encoder.

⚠ Warning

Please check that there is no incorrect wiring or loose connections between the controller and actuator.

If contact failure occurs in the motor power wiring, the motor power will be insufficient even in the Servo ON state, which will reduce the holding force.

Because of this, the actuator moving part will fall downward in a vertical operation.

(In this operation, the lock function of the actuator with lock does not work).

The surge voltage generated by contact failure may damage the controller.

Please make sure that there is no incorrect wiring or loose connections between the controller and actuator before use.

⚠ Caution

[Precaution when using the controller for the first time]

Reset the alarm.

Alarm "Absolute encoder ID Alarm error (code: 1-153)" will be generated when power is applied to the controller for the first time and/or when the battery is replaced, so an alarm reset is necessary.

(Resetting the alarm registers the absolute encoder specific ID No. in the controller).

Conducting a Return to Origin operation after the alarm reset allows the use of the controller.

⚠ Caution

Refer to this manual for the procedure for returning to the origin position of the controller and the recovery operation after power is re-applied. Refer to the Operation Manual of the Controller for the JXC □ 1 Series for the basic operation method.

⚠ Caution

Please keep this manual in a safe place for future use. It will be necessary to refer to this manual along with the teaching box and the configuration software manuals at installation and during fault finding.
* Keep this operation manual accessible for reference.

2.2 How to order

Order number of the controller

J X C D 1 7 T − L E Y 2 5 E A − 1 0 0

Communication protocol

E	EtherCAT®
9	EtherNet/IP™
P	PROFINET
D	DeviceNet™
L	IO-Link

Order number of the controller

(Enter from the actuator product number "LE" to "stroke") e.g.: For LEY25EA-100C-R1CD17T Enter “LEY25EA-100”.	
BC-E	Blank controller *

* Specified software (JXC-BCW) is required.

Mounting

7	Direct mounting
8 *	DIN rail mounting

* DIN rail is not included.
It must be ordered separately.

Option

Nil*	N/A
S	With straight communication plug
T	With T branch communication plug

* For products other than JXCD1, select Nil.

2.3 Product configuration

The configuration of the controller is shown below.

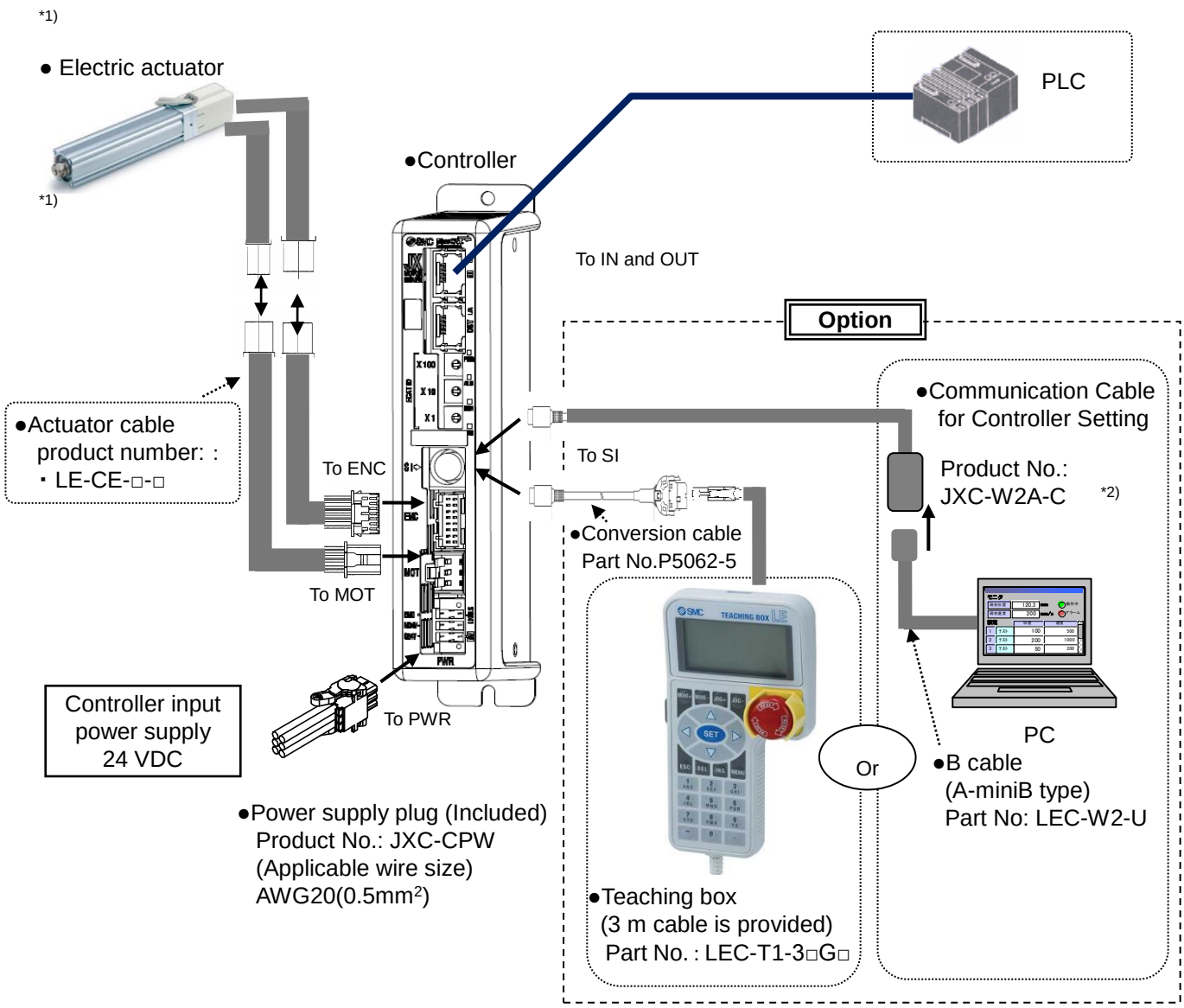

*1) These items are included when ordered using the part number for an actuator set.
*2) Please download the controller configuration software from the SMC website.
https://www.smcworld.com/

⚠ Warning

Connect the teaching box via the conversion cable. Do not connect it to the LAN port of the PC directly. Fire or damage may result.

2.4 Procedure (for operating the actuator)

Refer to the Operation Manual for the JXC□1 series.

3. Specifications

3.1 Basic specifications

Basic specifications of the product are described below.

Description	Specifications
Controlled motor	Step motor (servo 24 VDC)
Power supply voltage	24 VDC+/-10%
Current consumption	**Refer to the Operation Manual of JXC□1 series.**
Controlled encoder	Battery-less absolute encoder (resolution: 4096 pulses/rotation)
Memory	**Refer to the Operation Manual of JXC□1 series.**
LED indicator	**Refer to the Operation Manual of JXC□1 series.**
Lock control	**Refer to the Operation Manual of JXC□1 series.**
Cable length	**Refer to the Operation Manual of JXC□1 series.**
Cooling method	**Refer to the Operation Manual of JXC□1 series.**
Operating temperature range	0 to 55 °C (no freezing) Note 1)
Operating humidity range	**Refer to the Operation Manual of JXC□1 series.**
Insulation resistance	**Refer to the Operation Manual of JXC□1 series.**
Weight	**Refer to the Operation Manual of JXC□1 series.**

Note 1) For the LEY40 and LEYG40 series, if the vertical transfer load is greater than the weight listed below, the controller must be used at an ambient temperature of 40oC or less.
LEY40□EA: 9 kg,LEY40□EB: 19 kg,LEY40□EC: 38 kg
LEYG40□EA: 7 kg,LEYG40□EB: 17 kg,LEYG40□EC: 36 kg

Refer to the Operation Manual of JXC□1 series for communication specifications.

3.2 Parts description

Refer to the Operation Manual of JXC□1 series for a description of the controller parts.

3.3 Mounting

(1) Mounting

Refer to the Operation Manual of JXC□1 series.

(2) Grounding

Refer to the Operation Manual of JXC□1 series.

(3) Mounting location

Design the size of the control panel and the installation so that the temperature surrounding the controller is 55°C or less (Note 1). Mount the controller vertically on the wall with 30 mm minimum space on the top and bottom of the controller as shown below.

Allow 60 mm minimum space between the front of the controller and the door (lid) so that the connectors can be connected and disconnected.

Leave enough space between the controllers so that the operating temperatures of the controllers remain within the specification range.

Avoid mounting the controller near a vibration source, such as a large electromagnetic contactor or circuit breaker on the same panel.

Note) For the LEY40 and LEYG40 series, if the vertical transfer load is greater than the weight listed below, the controller must be used at an ambient temperature of 40°C or less.

LEY40□EA: 9 kg, LEY40□EB:19 kg, LEY40□EC:38 kg

LEYG40□EA:7 kg, LEYG40□EB:17 kg, LEYG40□EC:36 kg

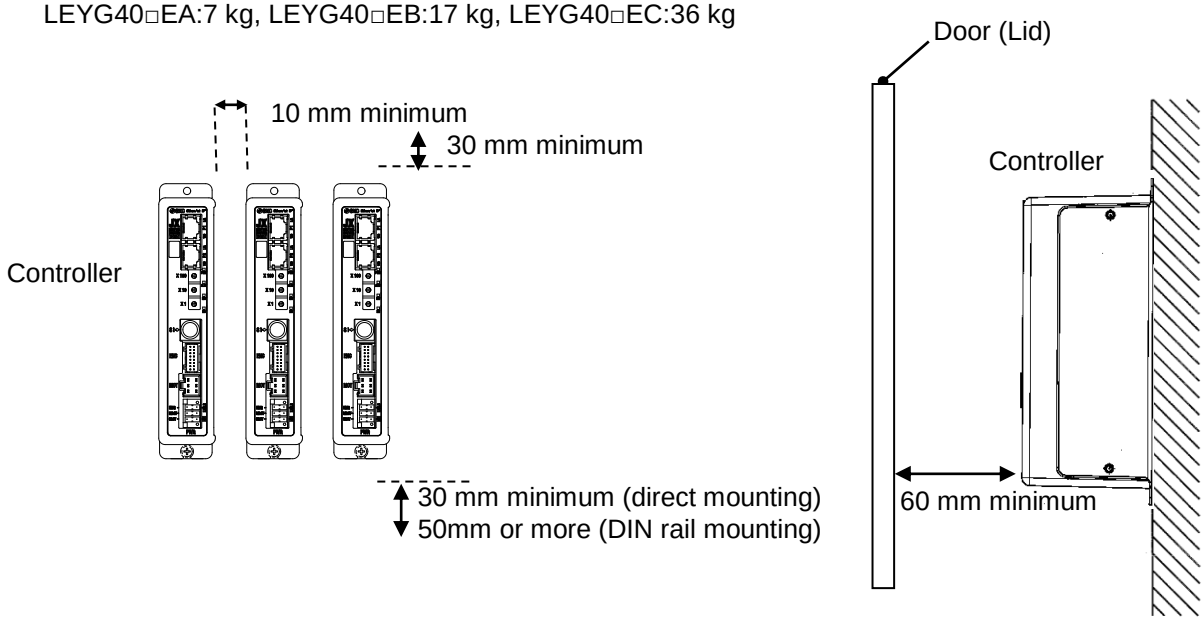

⚠ Caution

If the mounting surface for the controller is not flat or is uneven, excessive stress may be applied to the enclosure, which can cause failure. Be sure to mount on a flat surface.

(4) Precautions for electric actuator installation

Warning

Do not use in an environment where strong magnetic field are present.
A magnetic sensor is used in the encoder. Therefore, if the actuator motor is used in a strong magnetic field environment, malfunction or failure may occur.
Do not expose the actuator motor to a magnetic field with a magnetic flux density of 1 mT or more.
When installing an electric actuator or an air cylinder with an auto switch (ex. CDQ2 series) or electric actuators side by side, maintain 40 mm minimum space around the motor.
Refer to the construction drawing of the actuator motor.

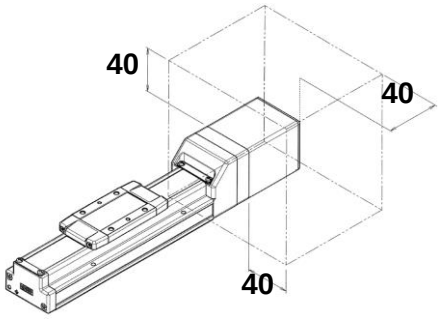

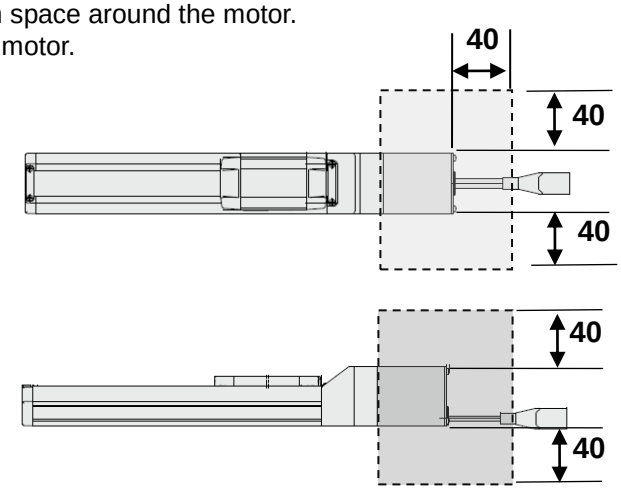

Air cylinder installation with an auto switch is forbidden in the shaded area.

4. Initial Setting Method

Refer to the Operation Manual for the JXC□1 series for the initial setting method of the rotary switch or field network.

5. External Connection

Refer to the Operation Manual for the JXC□1 series.

6. Power Supply Plug

Refer to the Operation Manual for the JXC□1 series.

7. LED Display

Refer to the Operation Manual for the JXC□1 series.

8. Operation Methods

Refer to the Operation Manual for the JXC□1 series.

9. Memory Map

Refer to the Operation Manual for the JXC□1 series.

10. Setting Data Entry

Refer to the Operation Manual for the JXC□1 series.

10.1 Step data

Refer to the Operation Manual for the JXC□1 series.

10.2 Basic parameters

The “Basic parameter” is data to define the operating conditions of the controller, conditions of the actuator, etc

Activation: “XX” = Become effective just after recorded into the controller
“X” = Become effective after restarting the controller
“—”= The parameter cannot be changed (fixed value)

Basic parameters.

Parameter name	Input range	Details	Activation
Controller ID	1 to 32	Identification number (axis) parameters of serial communications (communication with PC, teaching box) are set.	X
I/O pattern	Fixed value	This is a fixed value for the controller. Do not change the setting. (Default value is “1”)	—
ACC/ DEC pattern	Fixed value	This is a fixed value for the controller. Do not change the setting. (The default value varies depending on the electric actuator)	—
S-motion rate	Fixed value	This is a fixed value for the controller. Do not change the setting. (The default value varies depending on the electric actuator)	—
Stroke (+)	*1)	This defines the positive (+) side limit of the position. (Unit: mm) Any value greater than the [stroke (+)] value cannot be entered in the “Position” field data of step parameter setup.	XX
Stroke (-)	*1)	This defines the positive (-) side limit of the position. (Unit: mm) Any value greater than the [stroke (+)] value cannot be entered in the “Position” field data of step parameter setup.	XX
Max speed	*1)	This defines the maximum limit of the speed. (Unit: mm/s) Any value greater than the [stroke (+)] value cannot be entered in the “Position” field data of step parameter setup.	XX
Max ACC/DEC	*1)	This defines the maximum settable acceleration. (Unit: mm/s^2) Any value greater than the [Max ACC/DEC] value cannot be entered in the “Accel” field data of step parameter setup.	XX
Def In position	*1)	This defines the range to activate the INP when the actuator is within it after the return to origin operation.(Unit: mm)	XX

<table>
<tr><td>ORIG offset</td><td>*1)</td><td>This defines the position of the actuator after the return to origin operation.(Unit: mm)
■ The ORIG offset is 0 (mm).
 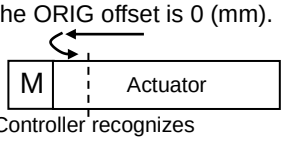

Controller recognizes
Position after return to origin position (0mm)
■ The ORIG offset is 100 (mm).
 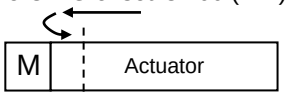

Controller'recognizes
Position after return to origin position (100mm)
In the examples on the left, the actuator positions are not different but the reference point that the controller recognizes will be changed after the return to origin operation.
⚠ Caution
If the value for the “ORIG offset” is changed, the “Stroke (+)” and “Stroke (-)” of the basic parameters should be checked. “ORIG offset” becomes valid after the return to origin operation, make sure that return to origin operation is performed after any changes.</td><td>XX</td></tr>
<tr><td>Max force</td><td>*1)</td><td>The maximum force for the pushing operation (Unit: %).</td><td>XX</td></tr>
<tr><td>Para protect</td><td>1 to 2</td><td>Sets the range in which the parameter and step data can be changed.
1. Basic parameter + Step data (Basic parameter + Return to origin parameter + Step data)
2. Basic parameter (Basic parameter + Return to origin parameter)</td><td>XX</td></tr>
<tr><td>Enable SW</td><td>1 to 2</td><td>This defines the status of the Enable switch of the teaching box.
1: Enabled
2: Disable</td><td>XX</td></tr>
<tr><td>Unit name</td><td>Fixed value</td><td>Indication of actuator type compatible with the controller.
Do not change the setting.</td><td>–</td></tr>
<tr><td>W-AREA1</td><td>“Stroke (-)” to “Stroke (+)” of the basic parameter</td><td rowspan="2">This is the setting to define the conditions where the WAREA will be turned ON. [Unit: mm]
If the current position is within the range between the W area end 1 and W area end 2, the WAREA will be turned ON.
* If W area output end 1 >W area output end 2, the alarm “Parameter ALM” will be activated. However no alarm is generated if W area end 1= W area end 2 = 0, the WAREA will be turned OFF</td><td>XX</td></tr>
<tr><td>W-AREA2</td><td>“Stroke (-)” to “Stroke (+)” of the basic parameter</td><td>XX</td></tr>
<tr><td>ORG Correct</td><td>Fixed value</td><td>This is a fixed value for the controller. Do not change the setting. (Default value is “0”)</td><td>–</td></tr>
<tr><td>Sensor type</td><td>Fixed value</td><td>This is a fixed value for the controller. Do not change the setting. (Default value is “2”)</td><td>–</td></tr>
<tr><td>Option 1</td><td>Fixed value</td><td>This is a fixed value for the controller. Do not change the setting. (Default value is “0”)</td><td>X</td></tr>
<tr><td>Undefined parameter No.11</td><td>Fixed value</td><td>This is a fixed value for the controller. Do not change the setting. (Default value is “0”)</td><td>X</td></tr>
<tr><td>Undefined parameter No.12</td><td>Fixed value</td><td>This is a fixed value for the controller. Do not change the setting. (Default value is “0”)</td><td>–</td></tr>
</table>

*1) The actuator model determines the available input values. Refer to the operation manual of the actuator for details.

10.3 Return to origin parameter

The “Return to origin parameter” is the setting data for the return to origin operation.

Activation: “XX” = Become effective just after recorded into the controller
“X” = Become effective after restarting the controller
“—”= The parameter cannot be changed (fixed value)

Details of Return to origin parameter

Parameter name	Range	Description	Activation
ORIG direction	1 to 2	Sets the direction of return to origin operation. Note) 1. CW 2. CCW	X
Return to origin mode	1 to 2	The setting for the return to origin operation. 1: Pushing origin operation [Stop] 2: Limit switch origin [SW]	XX
ORIG limit	*1)	A pushing force level at which to set the origin.	XX
ORIG time	Fixed value	This is a fixed value for the controller. (Do not change the setting)	—
ORIG speed	*1)	The allowable speed to move to origin.	XX
ORIG ACC/ DEC	*1)	The acceleration and deceleration during return to origin operation.	XX
Creep speed	Fixed value	This is a fixed value for the controller. (Do not change the setting)	—
ORIG sensor	0 to 2	The setting for the ORIG sensor. 0. The origin sensor is not effective. [Disable] 1. The origin sensor is N.O type. [N.O]. 2. The origin sensor is N.C type. [N.C].	XX
ORIG SW DIR	Fixed value	This is a fixed value for the controller. (Default value is “0”)	—
Undefined parameter No.21	Fixed value	This is a fixed value for the controller. (Default value is “0”)	—

*1) The actuator model determines the available input values. Refer to the operation manual of the actuator for details.
Note) When power is applied again after changing Return to origin parameter “Return to Origin Direction”, the SETON output is turned OFF.
Perform return to origin operation again.

11. Operations

11.1 Return to origin position

Return to origin operation should be performed first in the following cases:.

(1) When power is applied for the first time.
(2) When the actuator or motor is replaced.
(3) When alarm “Group E” is cleared by applying the power again.

For (1) and (2), Alarm No.10-153 “Absolute encoder ID Alarm error” is generated after the power is applied, so perform the return to origin operation after resetting the alarm.

■Return to origin operation

The actuator moves in the return to origin direction (* this direction is dependent on the actuator) from the initial position at the moment of power ON. Refer to (1) in the figure below.
When the actuator reaches the end of travel limit it pauses for a short time. The controller recognizes the position as the end of travel limit of the actuator. Then, the actuator moves at a low speed in the direction opposite to the return to origin direction: Refer to (2) in the figure below.
The position after the travel becomes the origin.

Return to origin signal
↓
Move in the return to origin direction
↓
Stop the movement
↓
Move in the opposite direction
↓
Origin position

(Example) Return to origin operation

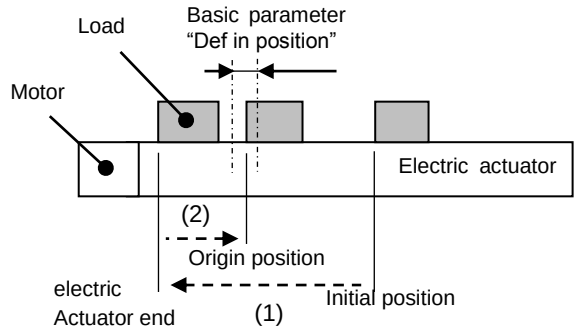

⚠ Caution

This direction is dependent on the electric actuator.

11.2 Positioning operation

Refer to the Operation Manual for the JXC□1 series.

11.3 Pushing operation

Refer to the Operation Manual for the JXC□1 series.

11.4 Controller input signal response time

Refer to the Operation Manual for the JXC□1 series.

11.5 Methods of interrupting operation

Refer to the Operation Manual for the JXC□1 series.

12. Start up procedure for battery-less absolute encoder

12.1 Procedure for start up

Procedure for start up of the battery-less absolute encoder for every occasion when the power is applied.

(1) When power is supplied for the first time (Refer to 12.2 for details)
In the following cases, Alarm No.10-153 “Absolute encoder ID does not match controller data” is generated after the power is applied, so perform the return to origin operation after resetting the alarm.

In addition, "When power is supplied for the first time" indicates the following cases.
- When connecting the electric actuator and turning on the power for the first time after purchase.
- When the actuator or motor has been replaced.
- When replacing the controller.

If the electric actuator and controller have been purchased as a set part number, the alarm may not be generated by the customer because the alarm No. 01-153 “Absolute encoder ID does not match controller data” is reset at the factory.
(If multiple units are purchased with the same set part number, alarm No. 01-153 “Absolute encoder ID does not match controller data” will occur depending on the combination of the connected electric actuator and controller.)

(2) When the power is supplied again (Refer to 12.3 for details)

(3) Alarm (group E) is cleared by a cut to the power supply (Refer to 12.4 for details).
SETON output is turned OFF. Perform return to origin operation.
When the power is applied again after changing Return to origin parameter “Return to Origin Direction”, follow the same start up procedure.

12.2 When supplying power for the first time

Please refer to the following [Procedures and Timing diagram] for each operation.

-Procedure-

1) Supply power
↓
2) ESTOP output is turned OFF
ALARM output is turned ON
OUT3 output is turned ON
([1-153: Absolute encoder ID does not match controller data] alarm is generated)
↓
3) RESET is turned ON.
↓
4) ALARM output is turned OFF.
↓
5) SVON input is turned ON
↓
6) SVRE output is turned ON.
* The actuator with lock is unlocked.
↓
7) SETUP input is turned ON.
↓
8) BUSY output is turned ON.
(Starts the operation.)
↓
9) SETON, INP output turns ON.
Return to origin is completed when BUSY output is turned OFF.
When return to origin operation is completed, DRIVE is available.

-Timing diagram-

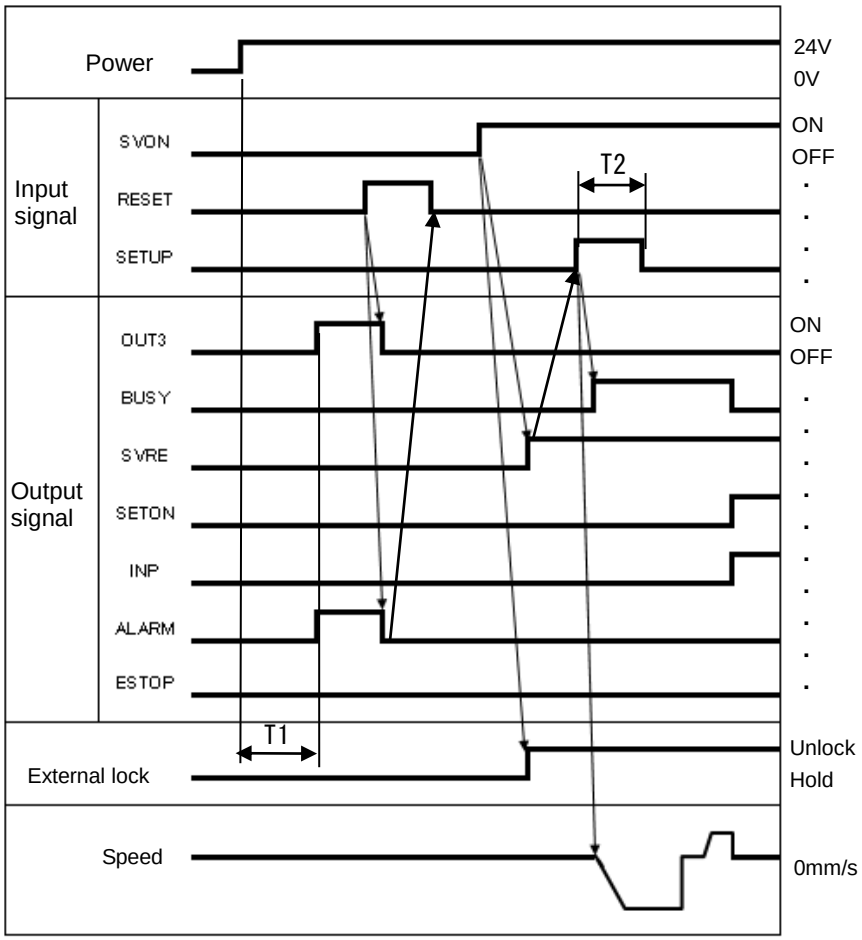

T1: 1.6 s or less (System initialize time + Time required to activate alarm)
T2: Communication cycle time: 2 times or more

12.3 Supply of power

(1) Power supply is turned back on (Normal)

If [ALARM] is OFF (no alarm) after supplying power again, SETON output is ON after T3.

-Procedure-

1) Supply power
↓
2) ESTOP output is turned OFF
ALARM output is turned OFF
↓
3) SETON output is turned ON after T3
↓
4) SVON input is turned ON.
↓
5) SVRE output is turned ON.
When return to origin operation is completed, DRIVE is available.

-Timing diagram-

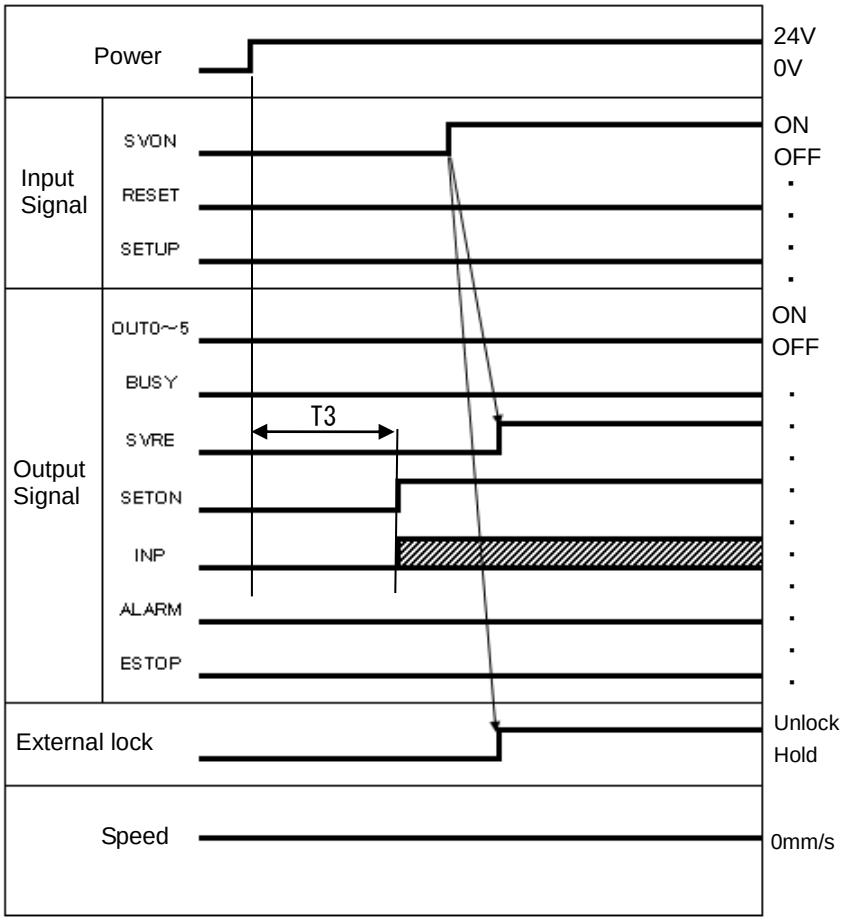

T3: 3 s or less
(System initialize time ＋ Time required for reading position data)

12.4 Alarm (group E) is cleared by a cut to the power supply

It is necessary to perform the return to origin operation when alarm (group E) is generated and the alarm is cleared by shutting off the power supply.
When the power is applied again after changing Return to origin parameter “Return to Origin Direction”, follow the same start up procedure.

-Procedure-

1) Supply power
↓
2) ALARM output turns OFF
ESTOP output is turned OFF
↓
3) SVON input turns ON after T1 passed
↓
4) SVRE output is turned ON.
*The time taken for SVRE output to turn ON depends on the actuator type and the operating conditions.
*The actuator with lock is unlocked.
↓
5) SETUP input is turned ON.
↓
6) BUSY output is turned ON.
(Starts the operation.)
↓
7) Return to origin is completed when SETON, INP output is turned ON and ONBUSY output is turned OFF.
When return to home position is completed, .DRIVE etc. is available.

-Timing diagram-

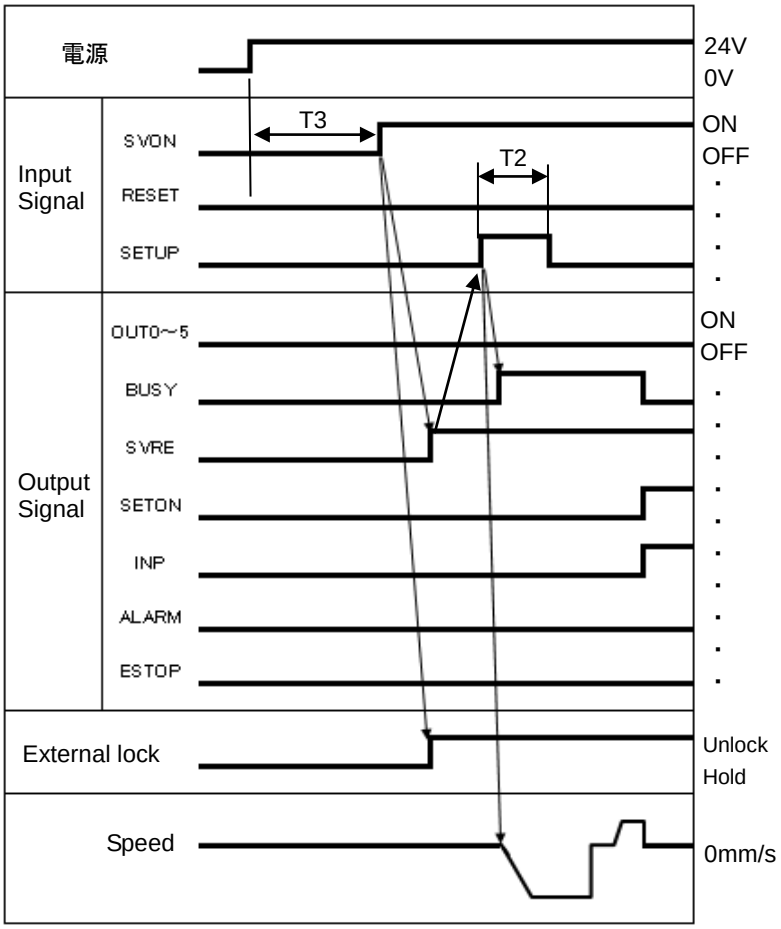

T2: Communication cycle time: 2 times or more
T3: 3 s or less (System initialize time ＋ Time required for reading position data)

13. Operation Instructions

Refer to the Operation Manual for the JXC□1 series.

14. Option

14.1 Actuator cable

LE−CE−□

Cable length (L)

1	1.5m
3	3m
5	5m
8	8m*
A	10m*
B	15m*
C	20m*

* Produced upon receipt of order

(a)

Signal name	Terminal No.
A	B-1
$\overline{A}$	A-1
B	B-2
$\overline{B}$	A-2
COM-A/COM	B-3
COM-B/ -	A-3

(c)

Cable colour	Terminal No.
Brown	2
Red	1
Orange	6
Yellow	5
Green	3
Blue	4

(b)

Signal name	Terminal No.
Vcc	B-1
GND	A-1
$\overline{A}$	B-2
A	A-2
$\overline{B}$	B-3
B	A-3
SD+(RX)	B-4
SD-(TX)	A-4

Shield

(d)

Cable colour	Terminal No.
Brown	12
Black	13
Red	7
Black	6
Orange	9
Black	8
Yellow	11
Black	10
Black	3

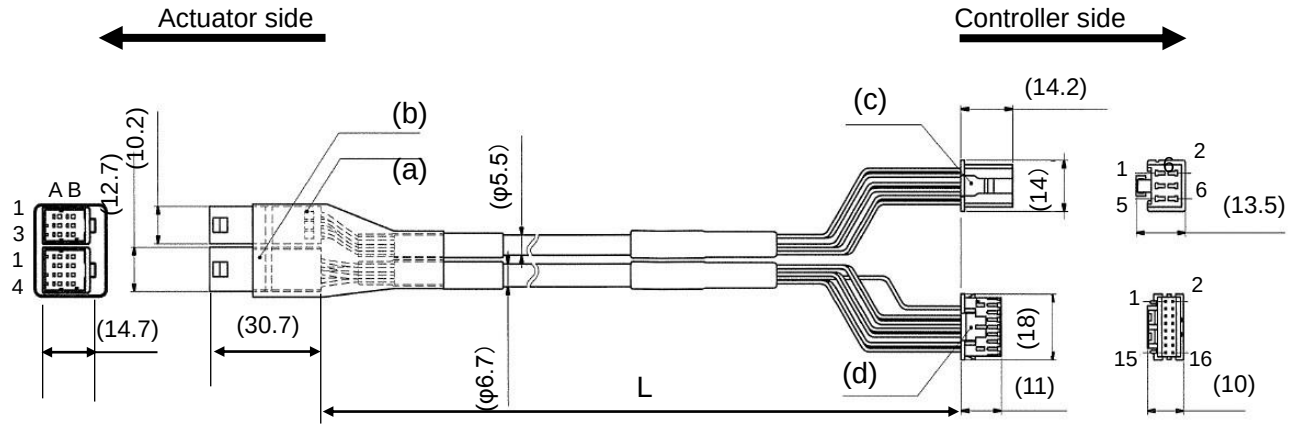

14.2 Actuator cable for actuator with lock (for sensor and lock)

L E - C E - □ - B

Cable length (L)

1	1.5m
3	3m
5	5m
8	8m*
A	10m*
B	15m*
C	20m*

* Produced upon receipt of order

(a)

Signal name	Terminal No.	Cable colour	Terminal No.
A	B-1	Brown	2
$\overline{A}$	A-1	Red	1
B	B-2	Orange	6
$\overline{B}$	A-2	Yellow	5
COM-A/COM	B-3	Green	3
COM-B/ -	A-3	Blue	4

(d)

(b)

Signal name	Terminal No.	Cable colour	Terminal No.
Vcc	B-1	Brown	12
GND	A-1	Black	13
$\overline{A}$	B-2	Red	7
A	A-2	Black	6
$\overline{B}$	B-3	Orange	9
B	A-3	Black	8
SD+(RX)	B-4	Yellow	11
SD-(TX)	A-4	Black	10
		Black	3

Shield

(e)

(c)

Signal name	Terminal No.	Cable colour	Terminal No.
Lock (+)	B-1	Red	4
Lock (-)	A-1	Black	5
Sensor (+)	B-3	Brown	1
Sensor (-)	A-3	Blue	2

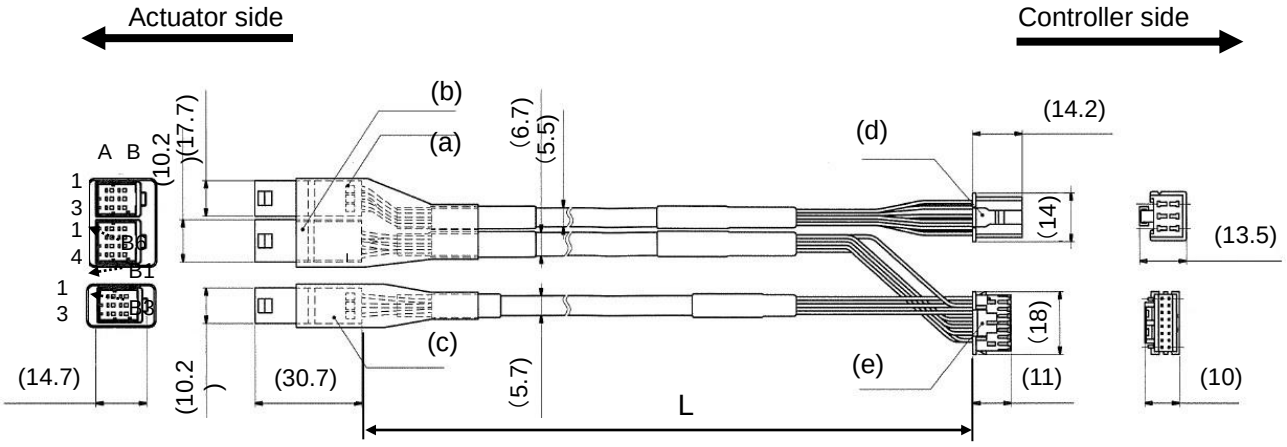

14.3 Communication cable for controller setting

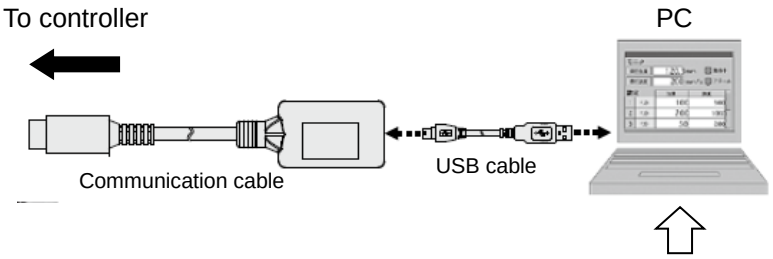

JXC－W2A－C

Communication cable

LEC－W2－U

USB cable

- Controller Configuration Software
- USB driver

Please download from SMC website.
https://www.smcworld.com

Operating environment

OS	Window®7,Windows®8.1,Windows®10
Communication interface	USB1.1 or USB2.0 port
Display	1024×768 or more

Windows®7, Windows®8.1, and Windows®10 are registered trademarks of United States Microsoft Corporation.

⚠ Caution

The latest version of the controller setting software must be used.
Please download from SMC website. http://www.smcworld.com/

14.4 Power supply plug

JXC－CPW

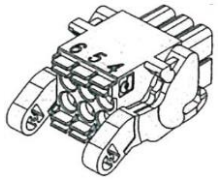

① C24V ④ 0V
② M24V ⑤ N.C.
③ EMG ⑥ LK RLS

Power Supply Plug

No.	Terminal	Function	Details
1	C24V	Control power supply (+)	Positive control power to be supplied to the controller.
2	M24V	Motor power (+)	Positive control power to be supplied to the motor.
3	EMG	Stop (+)	The positive power for Stop signal.
4	0V	Common power (-)	The negative common power for M24V, C24V, EMG and LK RLS.
5	-	NC	N/A
6	LK RLS	Unlocking (+)	Positive power for unlocking.

14.5 Teaching box

LEC－T1－3□G□

Teaching box

Cable length

3	3m

Original language

J	Japanes
E	English

Enable switch

Nil	No enable switch
S	Equipped with enable switch

Stop switch

G	With Stop switch

Conversion cable for connecting the teaching box
P5062-5 (Cable length: 0.3 m)
* Required for connecting the teaching box and JXC controller

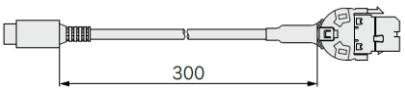

Dimensions

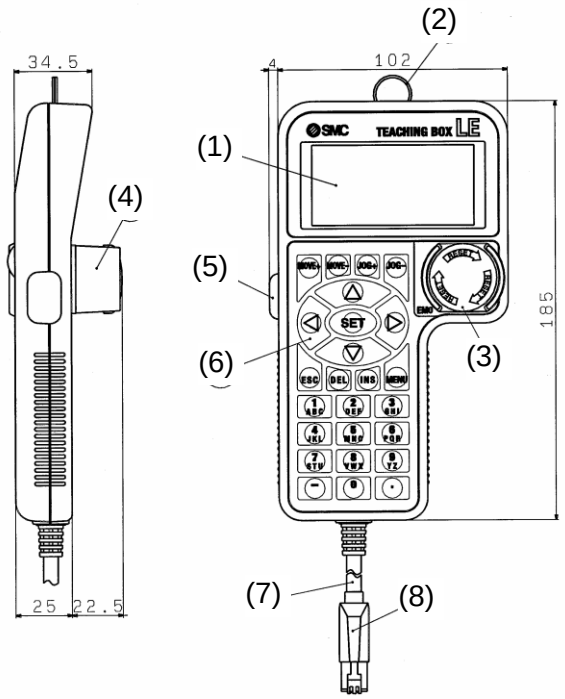

No	Indication	Function
(1)	LCD	Liquid crystal display (with backlight)
(2)	Ring	The ring to hang the teaching box.
(3)	Stop switch	When the switch is pressed, the switch locks and it stops. Turn clockwise to release the lock.
(4)	Stop guard	Protector for the stop switch
(5)	Enable switch (Option)	Switch to prevent unintentional operation of Jog test function. * Does not apply to other functions e.g. data change
(6)	Key switch	Entry switches
(7)	Cable	3m length
(8)	Connector	The connector to be connected to the CN4 of the controller

15. Alarm Detection for Motor Control

Details of the alarm for motor control can be checked using a PC (the controller configuration software) or a teaching box.

* Please refer to the manuals for the controller configuration software or the teaching box for details of the alarms

When an alarm is generated, deactivate the alarm after troubleshooting and correcting the error with reference to **15.2 Alarm and countermeasures.**

Alarms are divided into two types. One is alarm group B to D which can be cleared by inputting the signal RESET. The other is group E which cannot be cleared unless the power supply (24 VDC) is turned OFF.

15.1 Alarm group output

This product outputs a signal to distinguish the type of the alarm when an alarm is generated.
Alarms are classified into 5 groups. When an alarm is generated, it is output in OUT0 to OUT3.
The table below shows the combination of the alarm group and signal (OUT0 to OUT3).

Alarm group	Signal				
	ALARM	OUT0	OUT1	OUT2	OUT3
Alarm group B	ON	OFF	ON	OFF	OFF
Alarm group C	ON	OFF	OFF	ON	OFF
Alarm group D	ON	OFF	OFF	OFF	ON
Alarm group E	ON	OFF	OFF	OFF	OFF

After generation of the alarm, SVRE or SETON are output according to the contents of the alarm as shown below.

Alarm group	Signal		Procedure to restart
	SVRE	SETON	
Alarm group B	No change	No change	Turn ON RESET
Alarm group C	No change	No change	Turn ON RESET
Alarm group D	OFF	No change	Turn ON RESET, SVON
Alarm group E	OFF	OFF	Power supply is turned OFF → Supply again

- Procedure to restart operation when alarm group D is generated -

Procedure 1 Alarm group D is generated → "SVRE" changes to OFF (Servo is OFF)
Procedure 2 Turn ON RESET → (Alarm is cancelled) → After turning ON SVON, SVRE is turned ON (Servo is ON)

15.2 Alarms and countermeasures

Name of the controller setting software (code) ∗1	Teaching box description	Group	How to deactivate	Alarm contents/Countermeasure
Drive data value is wrong (01-048)	Step data ALM1	B	RESET	**<Condition>**The step data is incorrect for the following conditions (Settable range) (1) Area1 <Area2 (If both Area1 and Area2 is 0, the alarm will not be activated.) (2) Trigger LV ≤ Pushing force (3) Minimum speed of actuator ≤ Pushing speed ≤ Speed (4) Pushing speed ≤ Maximum pushing speed of actuator (5) Pushing force ≤ Minimum pushing force of actuator (6) Basic parameter "Maximum pushing force" ≥Minimum pushing force of the actuator (7) Basic parameters "Max pushing force" ≥ Threshold **<Countermeasure>** Modify the step data and basic parameters setting **⚠ Caution** Please refer to the manual or the catalogue of the actuator for the max/min pushing force/speed for the actuator.
Parameter value is wrong (01-049)	Parameter ALM	B	Turn ON RESET	**<Condition>**The step data is incorrect for the following conditions (Settable range) (1) Stroke (-) < Stroke (+) (2) W-Area output end 1 < W-Area output end 2 (If both Area output ends 1 and Area 2 are 0, the alarm will not be activated) (3) Maximum pushing force < Minimum pushing force of actuator **<Countermeasure>** Modify the basic parameter setting **⚠ Caution** Refer to the actuator operation Manual or catalogue for the maximum pushing speed for the actuator.
Set step data is not registered on list. (01-051)	Step data ALM2	B	Turn ON RESET	**<Condition>** For an operation for a specific step data no., the requested number of the step data is not registered. (When operation is commanded through a PLC, this alarm will be generated depending on the input signal interval and the holding time of signals) **<Countermeasure>** (1) Make sure that the “Movement MOD” of the step data is not "Blank (Disabled)" or the numbers other than [1 (ABS)] and [2 (INC)] are input in the numerical instruction operation. (2) Both PLC processing delay and controller scan delay are generated. Ensure that 2 times or more of the communication cycle time is maintained between the input signals.

Set stroke is outside the stroke limit. (01-052)	Stroke limit	B	Turn ON RESET	**<Contents>** The actuator goes outside the stroke limit specified by the basic parameters, "Stroke (+)" and "Stroke (-)" if it performs the requested operation. (Including JOG operation after return to origin) **<Countermeasure>** Make sure that the basic parameters, "Stroke (+)" and "Stroke (-)" are consistent with the distance of actuator movement specified in the step data. **⚠ Caution** If the operation method of step data is "relative coordinated movement", note the location where the operation starts and the distance traveled. If the location is out of the stroke range when the power is supplied, this alarm is generated. Move the table within stroke range, and supply power.
Alarm _Comment _058 (01-058)	3A	B	Turn ON RESET	**<Content>** This alarm occurs when the following parameters are outside of the settable range during the numerical instruction operation. (Settable range) (1) AREA 1 < AREA 2 (If both Area 1 and Area 2 are 0, the alarm will not be activated) (2) Trigger LV ≤ Pushing force (3) Minimum speed of actuator ≦ Pushing speed ≦ Speed (4) Pushing speed ≤ Maximum pushing speed of actuator (5) Pushing force ≥ Minimum pushing force of actuator (6) Basic parameter "Maximum pushing force" ≥ Minimum pushing force of the actuator (7) Basic parameters "Max pushing force" ≥ Trigger LV **<Countermeasure>** Modify the basic parameter setting. **⚠ Caution** Refer to the actuator operation manual or catalogue for the maximum pushing speed, minimum pushing force, and minimum speed for the actuator.
Alarm _Comment _061 (01-061)	3D	B	Turn ON RESET	**<Content>** This alarm occurs when specifying step data based on unregistered step data No. or when the numbers of the Movement MOD is specified out of range during numerical instruction operation**.** (When operation is commanded through a PLC, this alarm will be generated depending on the input signal interval and the holding time of signals) **<Countermeasure>** (1) Make sure that the “Movement MOD” of the step data is not "Blank (Disabled)" or a number other than [1 (ABS)] and [2 (INC)] are input in the numerical instruction operation. (2) Both PLC processing delay and controller scan delay are generated. Ensure that 2 times or more of the communication cycle time is maintained between the input signals.

Alarm _Comment _062 (01-062)	3E	B	Turn ON RESET	**<Contents>** The actuator moves outside the stroke limit specified by the basic parameters, “Stroke (+)” and “Stroke (-)” if it performs the requested operation. **<Countermeasure>** Make sure the basic parameters, "Stroke (+)" and "Stroke (-)" are consistent with the distance of actuator movement specified in the step data. **⚠ Caution** If the movement mode of step data is “relative coordinated movement”, note the location where the operation starts and the distance travelled. If the location is outside of the stroke range when power is supplied, this alarm is generated. Move the table to within the stroke range, and supply power.
Reacting force is outside limit when pushing. Position is unstable. (01-096)	Pushing ALM	C	Turn ON RESET	**<Contents>** In the pushing operation, the actuator is pushed back from the pushing operation origin position. **<Countermeasure>** Increase the distance from the pushing operation origin position to the object being pushed. Or, increase the pushing force.
Return to ORIG has not completed in the set time. (01-097)	ORIG ALM	C	Turn ON RESET	**<Contents>** Return to origin is not completed within the set time. **<Countermeasure>** Make sure there are no obstructions that interfere with the actuator movement.
Drive is ON when SVRE is OFF (01-098)	Servo OFF ALM	C	Turn ON RESET	**<Contents>** While the servo motor is OFF, the return to origin operation, positioning operation, pushing operation or JOG operation is requested. **<Countermeasure>** Modify the setting so that those operations will be requested while the servo motor is ON (the SVON input is ON).
Drive is ON when SETON is OFF (01-099)	Drive ALM	C	Turn ON RESET	**<Contents>** A positioning operation or pushing operation is requested before the return to origin operation is completed. **<Countermeasure>** Modify the setting so that these operations will be requested after the return to origin operation is completed.
Motor was not stationary when ABS encoder was communicating. (01-101)	Polarity not found	C	Turn ON RESET	**<Contents>** The power is applied when the actuator is operated by an external force. **<Countermeasure>** Make sure the actuator is stopped and then turn ON RESET.

<table>
<tr>
<td>Did not detect sensor when returning to ORIG.
(01-103)</td>
<td>ORIG Sens ALM</td>
<td>C</td>
<td>Turn ON RESET</td>
<td><Contents> An alarm is generated when return parameter has the conditions 1 or 2 shown below.
<table>
<tr><th></th><th colspan="2">Return to origin parameter setting</th></tr>
<tr><th></th><th>Return to origin mode</th><th>ORIG sensor</th></tr>
<tr><td>1</td><td>Pushing origin operation [Stop]</td><td>•Sensor N.O type [N.O]</td></tr>
<tr><td>2</td><td>Limit switch origin [Sensor]</td><td>•The origin sensor is not effective. [Disabled]
or
•Sensor N.O type [N.O]</td></tr>
</table>
Alarm is generated with the conditions above when the sensor is not mounted to the actuator.
<Countermeasure> Check the sensor installation and settings of the return to origin parameter.</td>
</tr>
<tr>
<td>Absolute encoder communication error.
(01-106)</td>
<td>AbEnc Comm ALM</td>
<td>C</td>
<td>Input RESET</td>
<td><Contents> When an error is detected in the communication with the absolute encoder when power is applied.
When the wiring of the encoder and controller is disconnected.
<Countermeasure> Check the connector of the controller and actuator wiring is not loose or the cable is not damaged.</td>
</tr>
<tr>
<td>Speed exceeded set value
(01-144)</td>
<td>Over speed</td>
<td>D</td>
<td>Turn ON RESET, SVON</td>
<td><Contents> The motor speed exceeds a specific level due to an external force, etc.
<Countermeasure> Make improvements so that the motor speed will not exceed the maximum speed of the actuator.
<table>
<tr><th>⚠ Caution</th></tr>
<tr><td>Refer to the actuator operation manual or the catalogue for the maximum speed of the actuator.</td></tr>
</table></td>
</tr>
<tr>
<td>Motor power supply voltage is out side set range.
(01-145)</td>
<td>Over motor Vol</td>
<td>D</td>
<td>Turn ON RESET, SVON</td>
<td><Contents>
The motor power supply voltage is out of range during [SVON] .
<Countermeasure> Make improvements so that the motor speed will not exceed the maximum speed of the actuator.
<table>
<tr><th>⚠ Caution</th></tr>
<tr><td>If the power supply is “inrush-current control type”, a voltage drop may cause an alarm during acceleration / deceleration</td></tr>
</table>
<Contents> The alarm may be caused by regenerative power depending on the method of operation of the actuator.
<Countermeasure> Make sure that the operating conditions are within the specifications.
<table>
<tr><th>⚠ Caution</th></tr>
<tr><td>Refer to the actuator operation manual or the catalogue for the method of operation of the actuator.</td></tr>
</table></td>
</tr>
<tr>
<td>Controller temperature exceeded set range.
(01-146)</td>
<td>Over Temp</td>
<td>D</td>
<td>Turn ON RESET, SVON</td>
<td><Contents> The temperature around the power element of the controller is too high.
<Countermeasure> Make improvements so that the temperature around the controller is kept appropriate.</td>
</tr>
</table>

Controller supply voltage is outside set range. (01-147)	Over Crtl Vol	D	Turn ON RESET, SVON	**<Contents>** The control power supply voltage within the controller is outside the set range. **<Countermeasure>** Make sure that the voltage supplied to the motor power (M24V) of the controller is within specification. **⚠ Caution** If a single power supply is used for both the control power and the motor power, or the power supply is “inrush-current control type”, a power voltage drop may occur during acceleration/deceleration, generating an alarm. **<Contents>** The alarm may be caused by regenerative power depending on the method of operation of the actuator. **<Countermeasure>** Make sure that the operating conditions are within the specifications. **⚠ Caution** Refer to the actuator operation Manual or catalogue for the operation method.
Current exceeded set value. (01-148)	Over load	D	Turn ON RESET, SVON	**<Contents>** The output current accumulated value has exceeded the specified value. **<Countermeasure>** Check whether the movement of the actuator is obstructed. Also, make sure that the load, speed, acceleration and deceleration are within the range of the actuator.
Failed to achieve set position in set time limit. (01-149)	Posn failed	D	Turn ON RESET, SVON	**<Content>** Failed to reach the set position within the set time limit. **<Countermeasure>** Make sure there are no obstructions that interfere with the actuator movement. Also, make sure that the load, speed, acceleration and deceleration are within the range of the actuator.
Communication error. (01-150)	Ctrl Comm ALM	D	Turn ON RESET, SVON	**<Contents>** The connection with the higher-level device (such as the PC or teaching box) is disconnected. **<Countermeasure>** Do not disconnect the connection with the higher-level devices (such as the PC and teaching box). In case of the communication failure of the PC or teaching box, resetting of alarm by PC or teaching box is possible after connecting
Absolute encoder ID does not match controller data. (01-153)	AbEnc ID ALM	D	Turn ON RESET, SVON and SETUP	**<Contents>** The controller detects the absolute encoder specific No. when power is re-applied. This specific No. is different from the number which has been connected before. **<Countermeasure>** This alarm is generated when the product is used for the first time, or when the actuator or controller is replaced. Turn ON RESET to reset the alarm.
Encoder error (01-192)	Encoder ALM	E	Shut power supply off	**<Condition>** Abnormality in communication with the encoder. **<Countermeasure>** Check the connection of the actuator cable.
Unable to find the motor phase in time. (01-193)	Polarity not found	E	Shut power supply off	**<Contents>** Incompatible controller is connected to the battery-less absolute encoder. **<Countermeasure>** Make sure that the actuator is compatible with the controller.

Output current exceeded set value. (01-194)	Overcurrent	E	Shut power supply off	**<Contents>** The output current of the power circuit is abnormally high. **<Countermeasure>** Make sure that there are no short circuits of actuator cables, connectors, etc. In addition, make sure that the actuator is compatible with the controller.
Current sensor abnormality has occurred. (01-195)	I sens ALM	E	Shut power supply off	**<Condition>** An abnormality is detected by the current sensor when the controller is reset. **<Countermeasure>** Make sure that the electric actuator is compatible with the controller. When a command to turn on servo is given, check if BK RLS is energized by installing the electric actuator vertically in order to check if the motor is driven by an external force. If the alarm is still generated when the power is re-applied, please contact SMC.
Error counter overflowed (01-196)	Err overflow	E	Shut power supply off	**<Contents>** An overflow of the position error counter inside of the controller has occurred. **<Countermeasure>** Make sure there are no obstructions that interfere with the actuator movement. Also, make sure that the load, speed, acceleration and deceleration are within the range of the actuator.
Memory content error (01-197)	Memory ALM	E	Shut power supply off	**<Contents>** An EEPROM memory error has occurred. **<Countermeasure>** Please contact SMC. (The write limit of the EEPROM is roughly 100,000 times)
CPU error (01-198)	CPU failure	E	Shut power supply off	**<Contents>** The CPU is not operating normally. (It is possible that the CPU or surrounding circuits have failed, or the CPU is malfunctioning due to electrical noise). **<Countermeasure>** If the alarm cannot be deactivated even after the power is re-applied, please contact SMC.
Alarm _Comment _0201 (01-201)	C9	E	Shut power supply off	**<Contents>** The controller detects an error in the absolute encoder No. when the power is re-applied. **<Countermeasure>** If the alarm cannot be deactivated even after the power is re-applied, please contact SMC.
Alarm _Comment _0202 (01-202)	CA	E	Shut power supply off	**<Contents>** The controller detects an error in the absolute encoder internal data when the power is re-applied. **<Countermeasure>** If the alarm cannot be deactivated even after the power is re-applied, please contact SMC.

*1. When alarm is generated, 3-digit numbers after [-] in this table [(code)] are stored to [Alarm code] of Byte6030h (1-4) in the input area of the memory map. The numbers of the alarm code indicated in this table are expressed as decimal numbers.

16. Specific Precautions for Battery-Less Absolute Encoder

⚠Warning

(1) Do not use in an environment where strong magnetic field is present.

A magnetic sensor is used in the encoder. Therefore, if the actuator motor is used in a strong magnetic field environment, malfunction or failure may occur.

The major failure is described below.

- Reduction of transporting ability (pushing force, speed)
- Damage to the actuator due to collision to the workpiece by positional displacement occurred.

Do not expose the actuator motor to a magnetic field with a magnetic flux density of 1 mT or more.

When installing an electric actuator or an air cylinder with an auto switch (ex. CDQ2 series) or electric actuators side by side, maintain 40 mm minimum around the motor.
Refer to the construction drawing of the actuator motor.

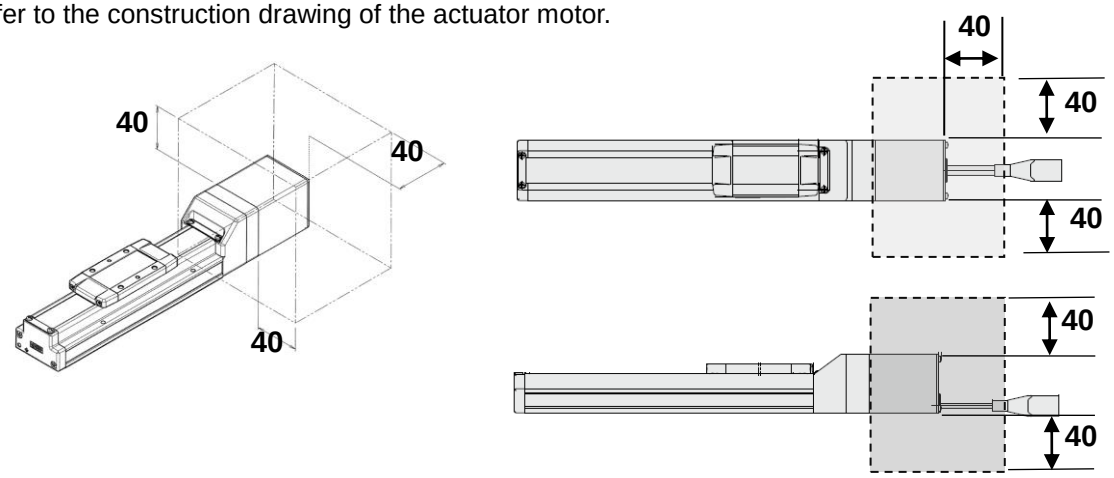

Air cylinder installation with an auto switch is forbidden in the shaded area.

(2) Check whether there are any loose connections between the controller and actuator.

If contact failure occurs with the motor powerwiring, the motor power will be insufficient, which reduces the holding force.
Because of this, the actuator moving part will fall downward in a vertical operation.
(In this operation, the lock function of the actuator with lock does not work).
The surge voltage generated by contact failure may damage the controller.

(3) The ambient temperature of the controller should be lower than 55℃ depending on the operating conditions of the actuator.

For the LEY40 and LEYG40 series, if the vertical transfer load is greater than the weight listed below, the controller must be used at an ambient temperature of 40°C or less. Otherwise, damage may occur due to higher temperature of the controller.

LEY40□EA: 9 kg, LEY40□EB:19 kg, LEY40□EC:38 kg
LEYG40□EA:7 kg, LEYG40□EB:17 kg, LEYG40□EC:36 kg

⚠Caution

(1) Supply power when the actuator is stationary.

The controller acquires the absolute position data from the absolute encoder when power is applied. Therefore, if the power is applied to the controller when the actuator is moving with an external force, the controller fails to acquire the absolute position data, which generates an alarm.

(2) When the controller is used for the first time, perform the offset adjustment.

Alarm “Absolute encoder ID Alarm error (code: 1-153)” will be generated when power is applied to the controller for the first time and/or when the actuator is replaced, therefore reset the alarm.
(Resetting the alarm registers the absolute encoder specific ID No. in the controller)
Turn the servo ON after resetting the alarm. Conducting a Return to Origin operation allows the use of the controller.

(3) When a blank controller and actuator absolute encoder with battery are used, write the parameter for the actuator to the absolute encoder with battery before use.

although the actuator type is identical, the actuator parameter in which the encoder and motor specifications are not identical are written, noise or vibration occurs during servo ON or operation.
If the parameter for the actuator with different specification is written, re-write the parameter for the actuator with the battery-less absolute encoder using JXC-BCW.

Refer to the Operation Manual of the controller and actuator for precautions.

17. Troubleshooting

Refer to the table below for troubleshooting. When none of the causes in the troubleshooting can be confirmed, it is presumed that the product is faulty and normal operation can only be recovered by the replacement of a part.
It is possible that this product may be damaged due to the operating conditions (applications). Please contact SMC to discuss appropriate measures.

17.1 Operation errors

Problem	Possible cause	Investigation method and location of possible cause	Countermeasure
Does not operate at all.	Power fault	Is the green LED on the controller ON?	Check the power, voltage and current supplied to the controller.
	External equipment failure	Check that the PLC connected to the controller operates correctly. Test operation of the controller on its own.	Refer to the Operation Manual and take appropriate measures.
	Incorrect wiring	Is the wiring connected correctly? Check if the controller is wired correctly, if there are no broken wires or short circuits with reference to the controller operation manual.	Correct the wiring and confirm that the input/output of each signal is correct. Separate the power supply for the CN1 controller and the CN5 I/O signal power supply.
	Alarm generated	Check if the controller has generated an alarm? Check the type of alarm. If applicable, check the type of alarm referring to this operation manual.	Refer to the Operation Manual and take appropriate measures.
	Lock release error	Is the lock releasing sound generated when the lock switch is turned on and off?	If there is no sound of lock release, the lock brake may be broken. → If the problem persists, please contact SMC.
	Unsuitable specification	Check if the controller's specifications are appropriate, the power supply is suitable and the controller is compatible with the actuator. If a blank controller is used, check that the written data is identical with the actuator used.	Check that the product number of the actuator used matches with the actuator which is applicable to the controller before use. If a blank controller is used, write the data, which is identical with the product number of the actuator used.
	Influence of a magnetic force	Check if there is equipment which generates the magnetic force, such as a magnet or electro-magnetic coil around the actuator.	The equipment, which generates the magnetic force, should be kept away from the motor. For example, keep 40 mm minimum distance from the cylinder with auto switch.

Problem	Possible cause	Investigation method and location of possible cause	Countermeasure
Operation stops intermittently	Alarm generated	Check if the controller has generated an alarm? Check the type of alarm. If it is, check the type of alarm referring to the controller operation manual, and take countermeasures in accordance with the manual.	Refer to the Operation Manual and take appropriate measures.
	Incorrect wiring	Is the wiring connected correctly? Check if the controller is wired correctly, if there are no broken wires or short circuits with reference to the controller operation manual.	Correct the wiring and confirm that the input/output of each signal is correct. Separate the power supply for the CN1 controller and the CN5 I/O signal power supply.
	Electrical noise	Connect to Ground correctly. Avoid bundling the cables.	Refer to the Operation Manual and take appropriate measures.
	Influence of a magnetic force	Check if there is equipment which generates a magnetic force, such as a magnet or electro-magnetic coil around the actuator.	The equipment, which generates the magnetic force, should be kept away from the motor. For example, keep 40 mm minimum distance from the cylinder with auto switch.
	Incorrect parameters	Check that the parameter values are correct. Reconfirm if an appropriate controller is used for the actuator.	Modify the values of the parameters and test the operation.
	Voltage drop	Check for a temporary voltage drop in the power supply? (If there is a temporary voltage drop in the power supply, the EMG terminal of CN1 power connector will turn OFF so the actuator will stop. However, this stop will be released when the voltage recovers).	There is a possibility of a momentary voltage drop because the capacity of the power supply is insufficient, or if the power supply has “inrush-current protection”.
	Pushing operation	Check during a pushing operation that the INP output signal is turning on. (On completion of the pushing operation the output INP signal is generated, the PLC cannot confirm the completion of driving).	If the controller version is below SV1.00, the pushing force is reduced when the energy saving mode is turned on. If the pushing force is reduced to a value less than the value in step data “trigger LV” the INP output signal is turned off. Check the INP output signal before the energy saving mode is turned on.
	Unsuitable specification	Check if the controller specifications are appropriate, the power supply is suitable and the controller is compatible with the actuator. If a blank controller is used, check that the written data is identical with the actuator used.	Check that the product number of the actuator used matches with the actuator which is applicable to the controller before use. If a blank controller is used, write the data, which is identical with the product number of the actuator used.
	Signal timing	Check the timing of the signal from the PLC to the controller.	Leave a minimum interval of 15 ms (recommendation is 30 ms) between input signals and maintain the state of the signal for a minimum of 15 ms (recommendation is 30 ms), because PLC processing delays and controller scanning delays can occur.

17.2 Position / Speed problems

Problem	Possible cause	Investigation method and location of possible cause	Countermeasure
The actuator does not move to the correct position.	Incorrect Origin position	If it is a pushing operation, repeat a return to origin operation several times to check if the actuator returns to the origin correctly. Perform the return to origin position operation several times to check the origin position.	Take measures to make the actuator operate normally (remove foreign matter that interferes with the actuator movement, etc.)
	Incorrect parameters	Check that the parameter values are appropriate and the program is correct. Review the maximum speed, the maximum acceleration and the maximum deceleration of the actuator.	Modify the values of the parameters and test the operation.
	Unsuitable specification	Check if the controller specifications are appropriate, the power supply is suitable and the controller is compatible with the actuator. If a blank controller is used, check that the written data is identical with the actuator used.	Check that the product number of the actuator used matches with the actuator which is applicable to the controller before use. If a blank controller is used, write the data, which is identical with the product number of the actuator used.
Insufficient speed	Incorrect wiring	Is the wiring connected correctly? Check if the controller is wired correctly, if there are no broken wires or short circuits with reference to the controller operation manual.	Correct the wiring and confirm that the input/output of each signal is correct. Separate the power supply for the CN1 controller and the CN5 I/O signal power supply.
	Unsuitable specification	Check if the controller specifications are appropriate, the power supply is suitable and the controller is compatible with the actuator. If a blank controller is used, check that the written data is identical with the actuator used.	Check that the product number of the actuator used matches with the actuator which is applicable to the controller before use. If a blank controller is used, write the data, which is identical with the product number of the actuator used.
	Influence of a magnetic force	Check if there is equipment which generates a magnetic force, such as a magnet or electro-magnetic coil around the actuator.	The equipment, which generates the magnetic force, should be kept away from the motor. For example, keep 40 mm minimum distance from the cylinder with auto switch.
	Signal timing	Check the timing of the signal from the PLC to the controller.	PLC processing delay and controller scan delay are generated. Please ensure an interval of 15ms (30 ms if possible) or more between input signals, and maintain the signal state.
	Data not stored correctly	Check whether data (step data, parameter) is written correctly. Do not turn off the controller input power or remove the cable while data is being written (green light flashing).	Input correct data (step data, parameter) again and confirm operation.

Problem	Possible cause	Investigation method and location of possible cause	Countermeasure
Required speed is not achieved	Incorrect parameters	Check that the parameter values are correct. Review the maximum speed and the maximum acceleration of the actuator.	Modify the values of the parameters and test the operation.
	Operation pattern is not suitable.	Check if a trapezoidal acceleration/deceleration is programmed for the actuator operation. In case of such operation, the actuator may start slowing down before it reaches the maximum speed.	Modify the setting to make the moving distance longer or the acceleration larger.
	Influence of a magnetic force	Check if there is equipment which generates a magnetic force, such as a magnet or electro-magnetic coil around the actuator.	The equipment, which generates the magnetic force, should be kept away from the motor. For example, keep 40 mm minimum distance from the cylinder with auto switch.
	Unsuitable specification	Check if the controller's specifications are appropriate, the power supply is suitable and the controller is compatible with the actuator. If a blank controller is used, check that the written data is identical with the actuator used.	Check that the product number of the actuator used matches with the actuator which is applicable to the controller before use. If a blank controller is used, write the data, which is identical with the product number of the actuator used.
	Voltage drop	Check for a temporary voltage drop in the power supply? (If there is a temporary voltage drop in the power supply, the EMG terminal of CN1 power connector will turn OFF so the actuator will stop. However, this stop will be released when the voltage recovers.)	There is a possibility of a momentary voltage drop because the capacity of the power supply is insufficient, or if the power supply is "inrush-current control" type. If necessary, replace the power supply.

Technisches Büro Traffa

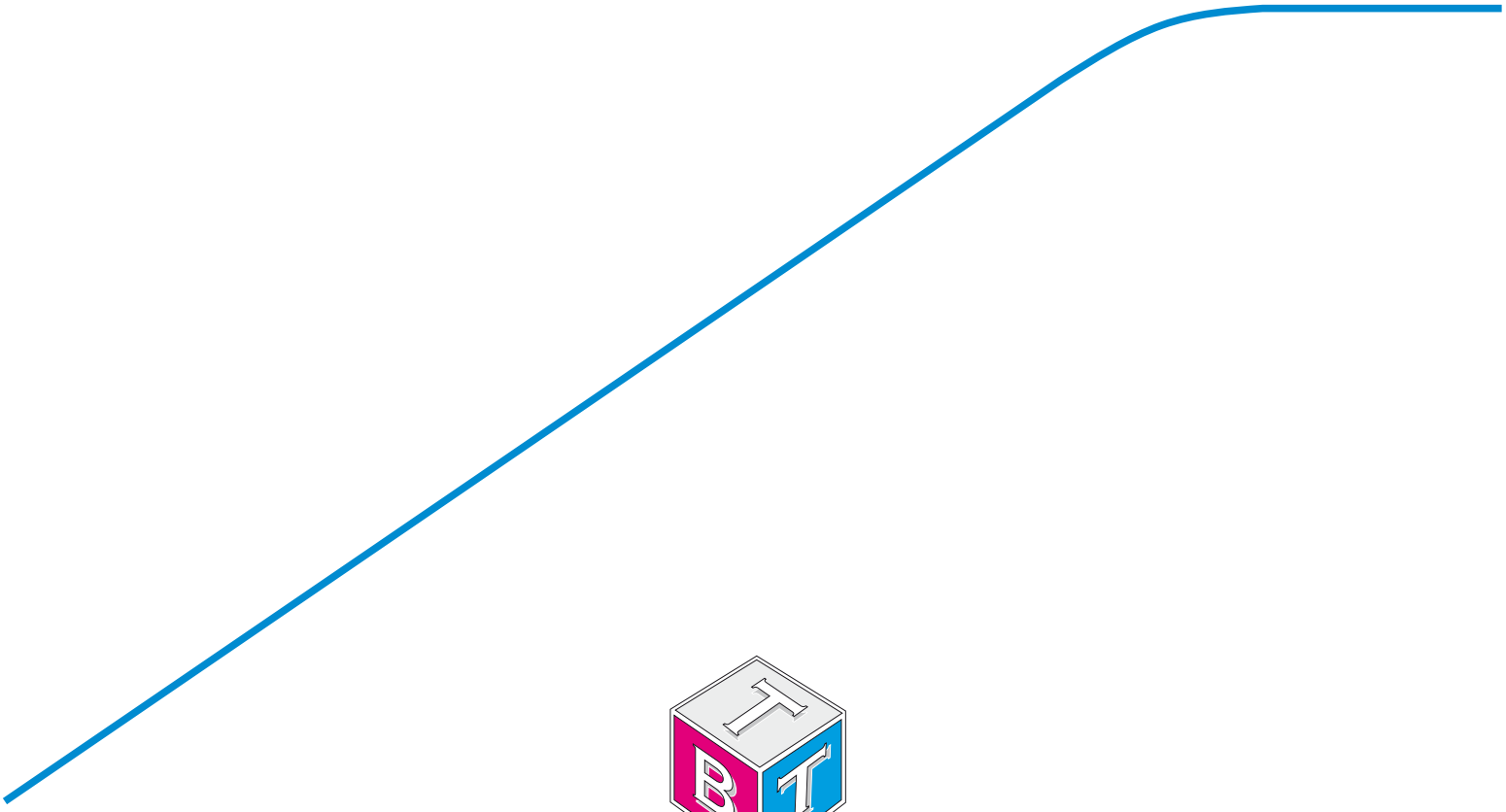

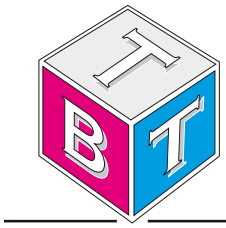

Zentrale:
TBT Technisches Büro Traffa e.K.
Theodor-Heuss-Str. 8
D- 71336 Waiblingen
Tel.: +49 (0) 71 51 / 604 24-0
Fax.: +49 (0) 71 51 / 604 24-40
info@traffa.de
www.traffa.de

NL Bayern:
TBT Technisches Büro Traffa e.K.
Schöneckerstr. 4
D- 91522 Ansbach
Tel.: +49 (0) 981 / 48 78 66-50
Fax.: +49 (0) 981 / 48 78 66-55
mail@traffa.de
www.traffa.de

TDB 01-01 8/21